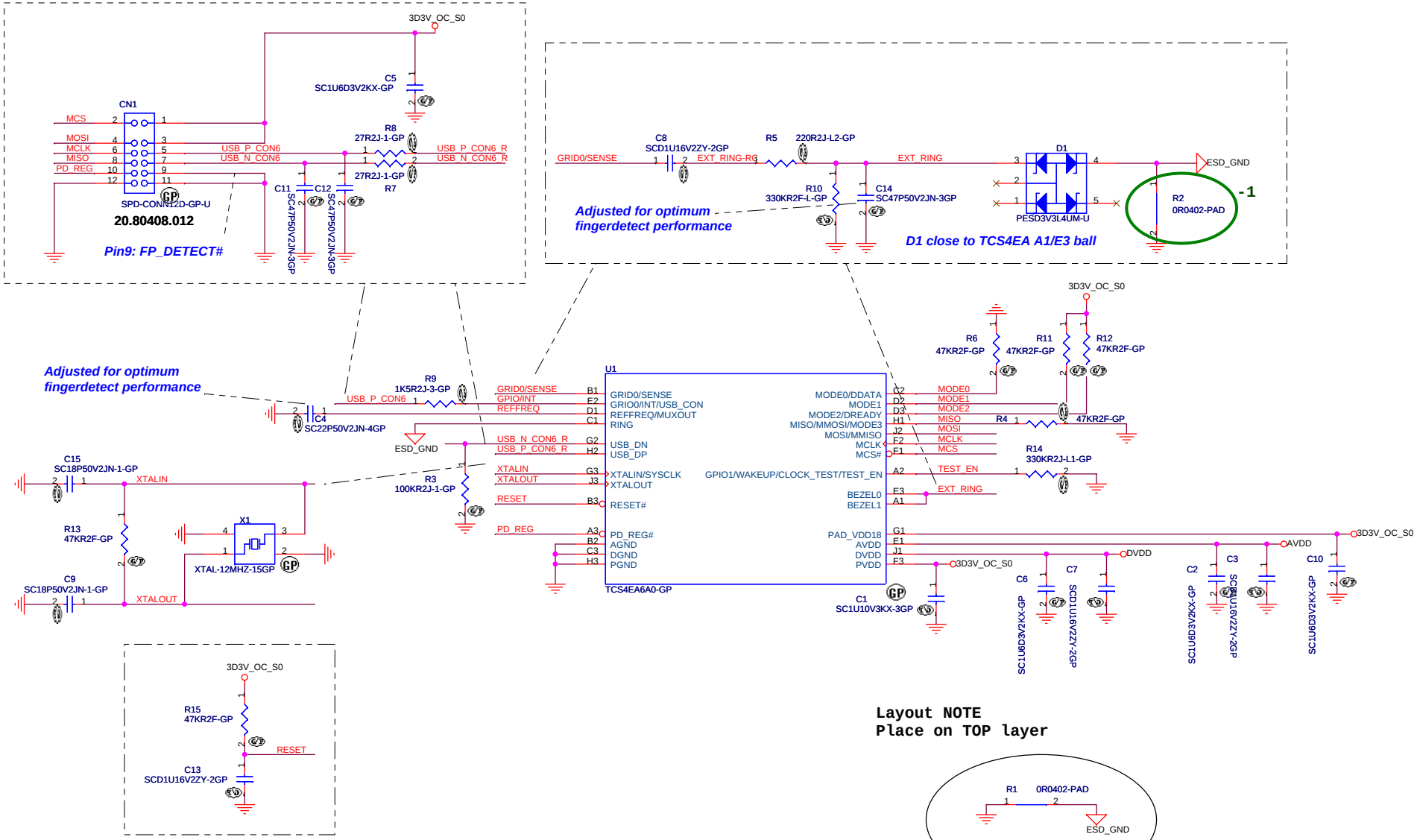

Project code: 91.4Z401.001
PCB P/N : 48.4Z405.011
REVISION : 07639-1

BOM

緯創資通 **Wistron Corporation**
21F, 88, Sec.1, Hsin Tai Wu Rd., Hsichih,
Taipei Hsien 221, Taiwan, R.O.C.

Title: ***uPEK Fingerprint TCS4EA***

Size	Document Number	Rev
A3	HOMA	-1

Date: Monday, March 10, 2008 Sheet 1 of 1